Eemax®

"SINGLE POINT"

CODE COMPLIANT HANDWASHING HEATERS

Instant Comfort...Endless Savings

ELECTRIC TANKLESS WATER HEATERS

9/06

MODELS:

	Volts	kW	Amps
SP2412	120V	2.4kW	20A
SP3012	120V	3.0kW	25A
SP3512	120V	3.5kW	29A
SP3208	208V	3.0kW	14.4A
SP4208	208V	4.1kW	19.7A
SP35	240V	3.5kW	14.6A
SP48	240V	4.8kW	20A
SP55	240V	5.5kW	22.9A
SP3277	277V	3.0kW	10.8A
SP4277	277V	4.1kW	14.8A

SPECIFICATION OPTIONS

☐ FC = Flex Connector braided-stainless steel water connections available. (EX176, EX177)
Example: SP3512FC

APPLICATIONS:

- Shopping Malls
- Office and Tenant Spaces
- Commercial Buildings (restaurants, etc.)
- Modular Buildings/Modular Offices
- Public Hand Washing
- Service Stations
- Schools
- Concessions Stands, Stadiums

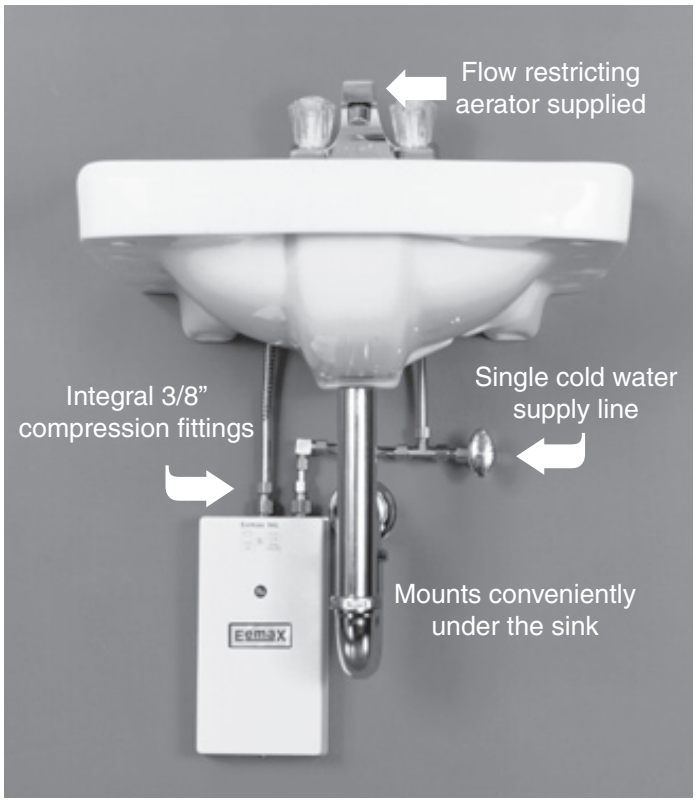

Designed to comply with .5 GPM handwashing code target outlet temperature 105° - 110°.

ADVANCED TECHNOLOGY • HIGHEST EFFICIENCY
DESIGNED FOR DURABILITY

MADE IN USA

QUALITY FEATURES

- **On Demand Hot Water** - no delay.
- **Cut Energy Waste** - flow switch activates heater only on demand (no standby heat loss). **99% efficient**
- **Continuous Hot Water** - no storage capacity to run out.
- **Reduces Installation Cost** - no T & P relief valve needed (check local codes).
- **Easy Installation** - only one cold water line need be brought to lavatory - integral ⅜" compression fittings on top (no sweat connections). Mounts on wall at point-of use.
- **Integral Flow Restrictor** - Built in to ensure proper temperature rise. Complies with U.S. Federal regulations.
- **Faucet Aerator** - with excellent spray pattern supplied with unit.
- **Hands Free**, sensor and metering faucet compatible
- **Prevents Legionella Bacteria Growth**
- **Reduces Liming, Calcification and Sedimentation.**
- **Complies with Handicap Requirements**
- **Ni Chrome Element** - a unique, patented flow path ensures optimum heat transfer and extended element life.
- **Compact Size** - dimensions 10.75" x 5.25" x 2.875"; weight 3 lbs.
- **Field Serviceable Element** - replaceable cartridge element (1 year warranty).
- **Warranty** - Full Factory Warranty - Heaters are guaranteed against failure due to leaks of "Heater Body/Element Assembly" for a period of FIVE YEARS.
- **High Temperature Limit Switch** - protects against element burn out, with reset button.

SUGGESTED SPECIFICATION

Tankless Water Heater shall be an Eemax Model _____ (model #) with , _____ (kW rating) vac, _____ (voltage) to heat 0.5 GPM @ a temperature rise of _____ (amperage) degrees F. Unit shall have ABS-UL 94Vo rated cover. Element shall be replaceable cartridge insert. Unit shall have a replaceable filter in the inlet connector and a flow regulator in the outlet connector. Element shall be iron free, nickel chrome material. Heater shall be fitted with ⅜" compression nuts and sleeves to eliminate need for soldering. Heater shall be installed upright with water connections on top only. Hot water storage tanks prohibited. Unit shall be Eemax or approved equal.
NOTE: Refer to rating chart for product information.

NOTE: Flow Activated 0.5 GPM

OPERATING PRESSURE	
Min.	Max.
25 PSI	150 PSI

OPTIONAL FLEX CONNECTOR ACCESSORY (FC)

Stainless steel braid reinforced flexible water connector.
☐ 3/8" C x 1/2" FIP - 16" faucet supply (EX176)
or
☐ 3/8" C x 3/8" C - 16" faucet supply (EX177)

RATINGS OF SINGLE POINT UNITS { Cold water feed only }

MODEL	VOLTS	kW	AMPS	RISE AT 0.5 GPM	RECOMMENDED WIRE SIZE
SP2412	120V	2.4kW	20A	33°	10AWG
SP3012	120V	3.0kW	25A	41°	10AWG
SP3512	120V	3.5kW	29A	48°	10AWG
SP3208	208V	3.0kW	14.4A	41°	14AWG
SP4208	208V	4.1kW	19.7A	56°	12AWG
SP35	240V	3.5kW	14.6A	48°	14AWG
SP48	240V	4.8kW	20A	65°	12AWG
SP55	240V	5.5kW	22.9A	75°	10AWG
SP3277	277V	3.0kW	10.8A	40°	14AWG
SP4277	277V	4.1kW	14.8A	56°	14AWG

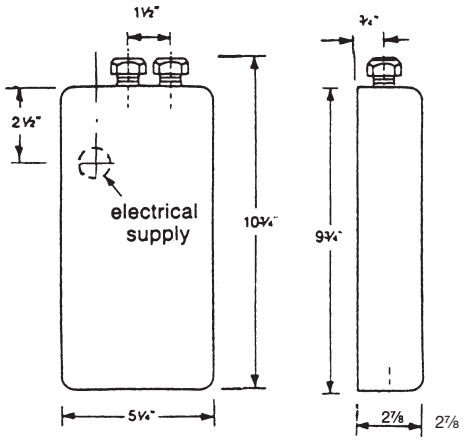

SPECIFICATIONS:

Dimensions: 10.75" x 5.25" x 2.875"
Weight: 3 lbs.
Materials:
Cover: ABS UL rated 94Vo.
Color: White
Element: Replaceable cartridge insert
Pipe-Fittings: 3/8" compression at top of unit
UL Listed: E86887 (M)
U.S. Patent #'s: 4,762,980 and 4,960,976

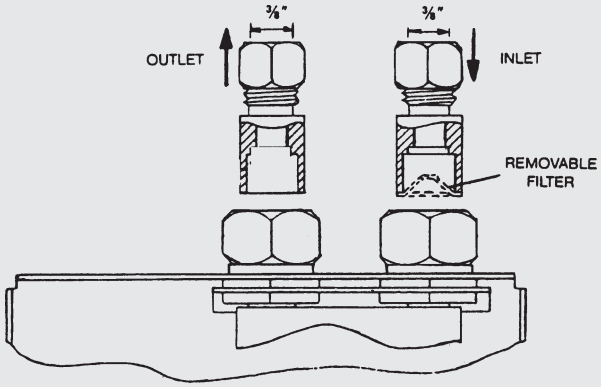

c UL US LISTED

SPECIAL DESIGN SERVICE

INQUIRIES FOR UNITS FOR UNIQUE APPLICATIONS ARE WELCOME. CALL OUR TECHNICAL SERVICE DEPT. 1-800-543-6163

EEMAX SUBMITTAL

Engineer/Architect: _____
Job Name/Customer: _____
Location: _____
Contractor: _____
Representative: _____
HEATER SPECIFICATIONS:

	Option	Quantity	kW	Voltage	AMPS	GPM
Single Point Model # SP_____	_____	_____	_____	_____	_____	____

Eemax® Inc.
353 Christian Street, Oxford, CT 06478
www.eemax.com
Telephone: (203)267-7890
TOLL FREE: 1-800-543-6163
FAX: (203) 267-7975